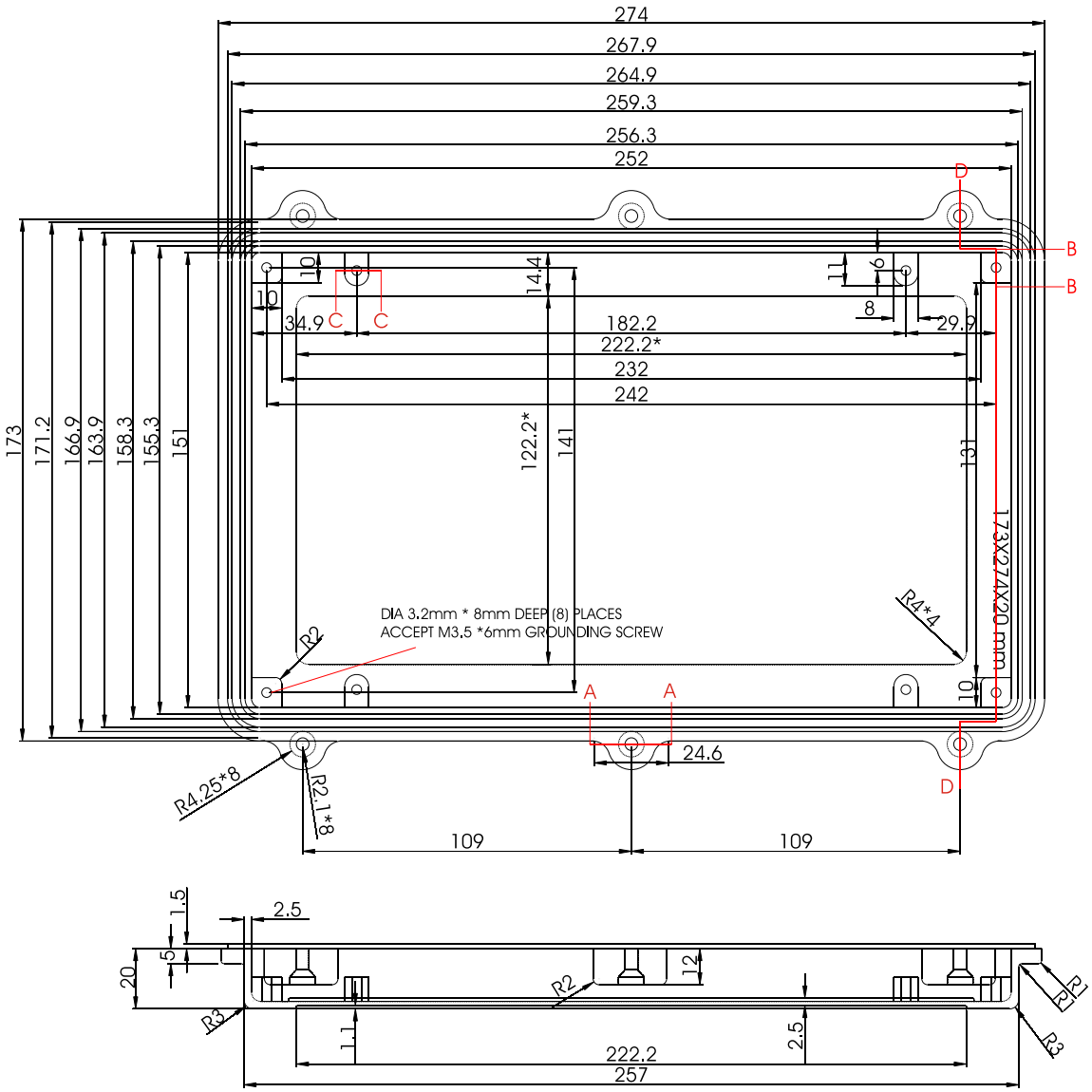

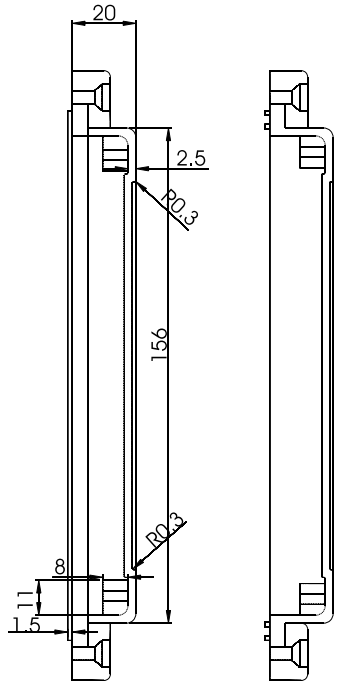

D-D

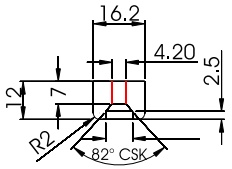

DETAIL A-A

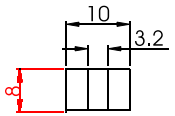

DETAIL B-B

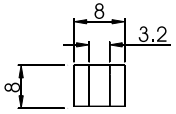

DETAIL C-C

GH02AL007/420: protection system IP40
GH02AL007/920: protection system IP67
All measurments in mm

* recessed area

RICHARD WÖHR GMBH
Gräfenau 58-60
D-75339 Höfen / Enz
Telefon (07081) 9540-0
Telefax (07081) 9540-90
Richard@WoehrGmbh.de
www.WoehrGmbh.de

Expression:
Industrial enclosure
Artikel-Nummer:
GH02AL007/420
GH02AL007/920
Lid

Maße in mm

1/2

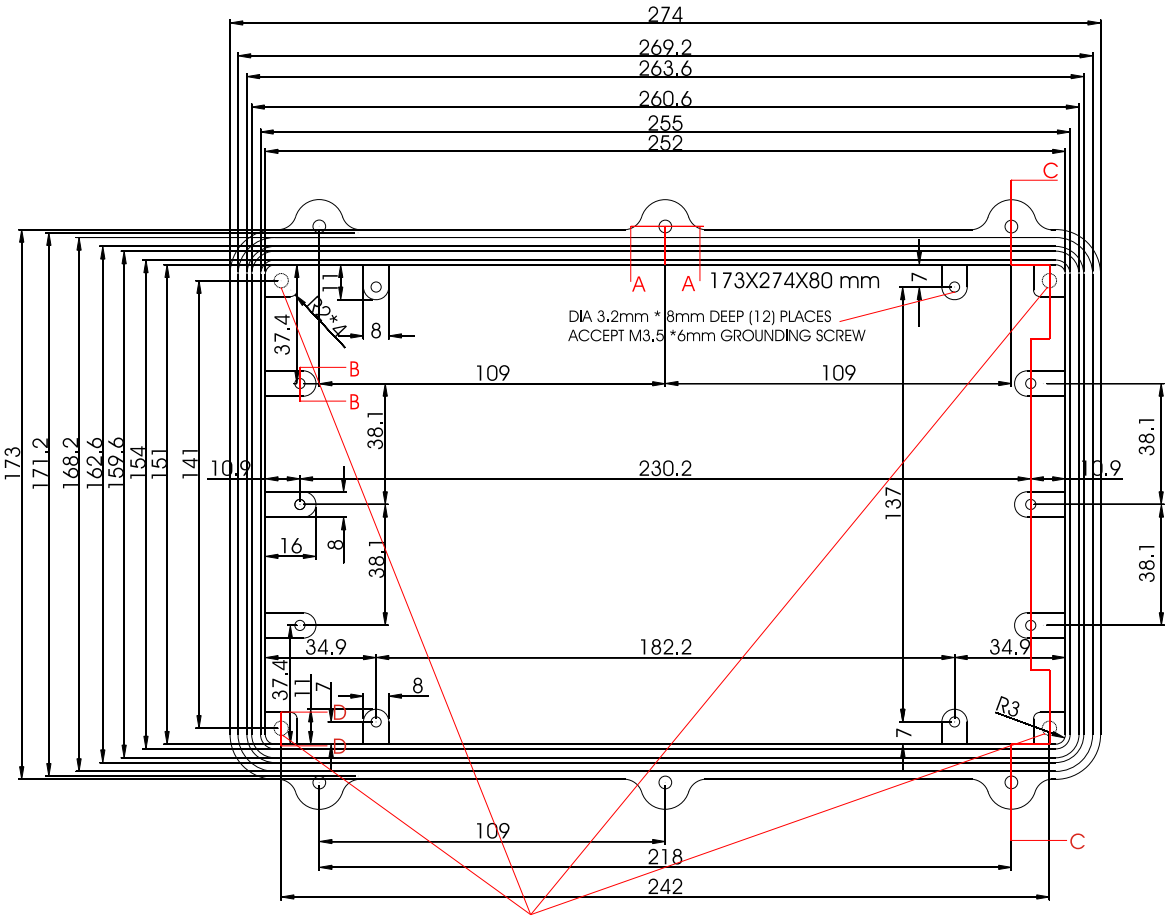

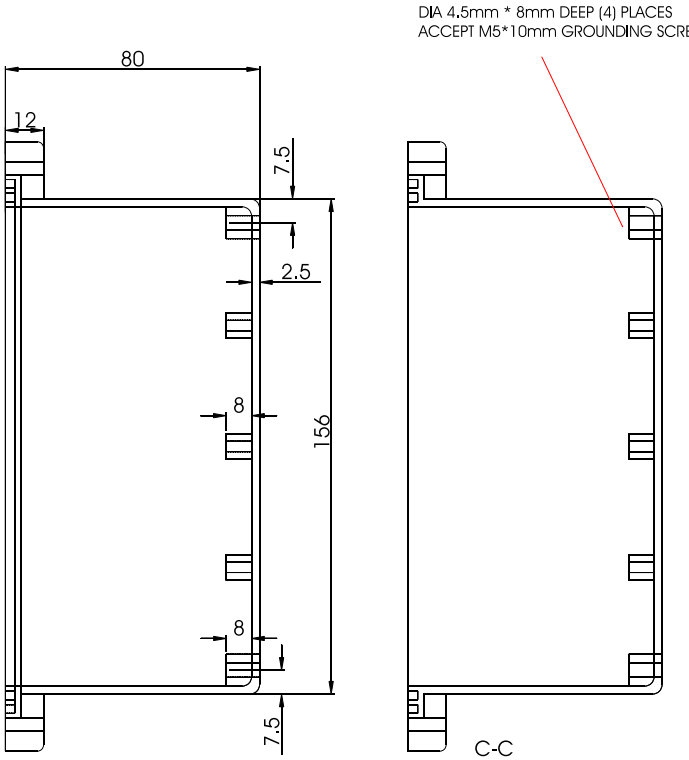

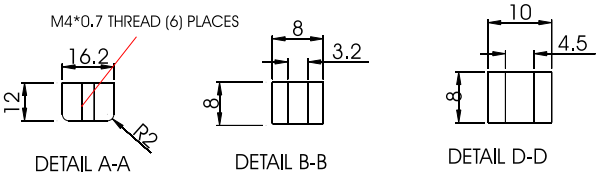

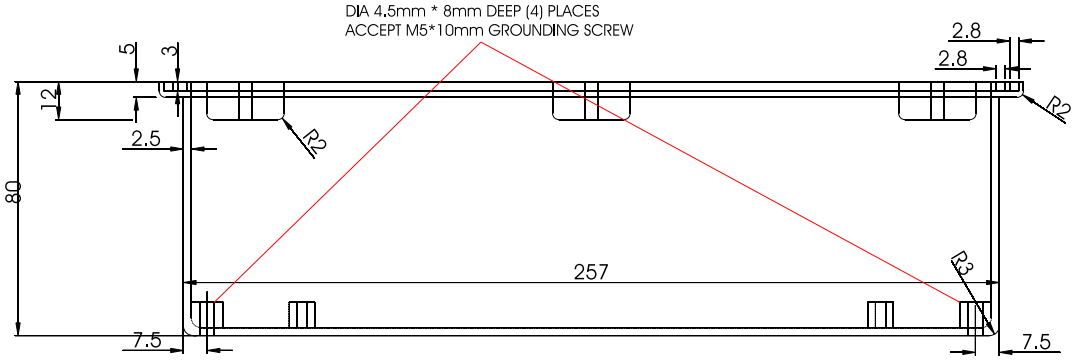

GH02AL007/420: protection system IP40
GH02AL007/920: protection system IP67
All measurments in mm

RICHARD WÖHR GMBH
Gräfenau 58-60
D-75339 Höfen / Enz
Telefon (07081) 9540-0
Telefax (07081) 9540-90
Richard@WoehrGmbh.de
www.WoehrGmbh.de

Expression:
Industrial enclosure
Artikel-Nummer:
GH02AL007/420
GH02AL007/920
Base

Maße in mm